DRW LY-004-TBAR-01

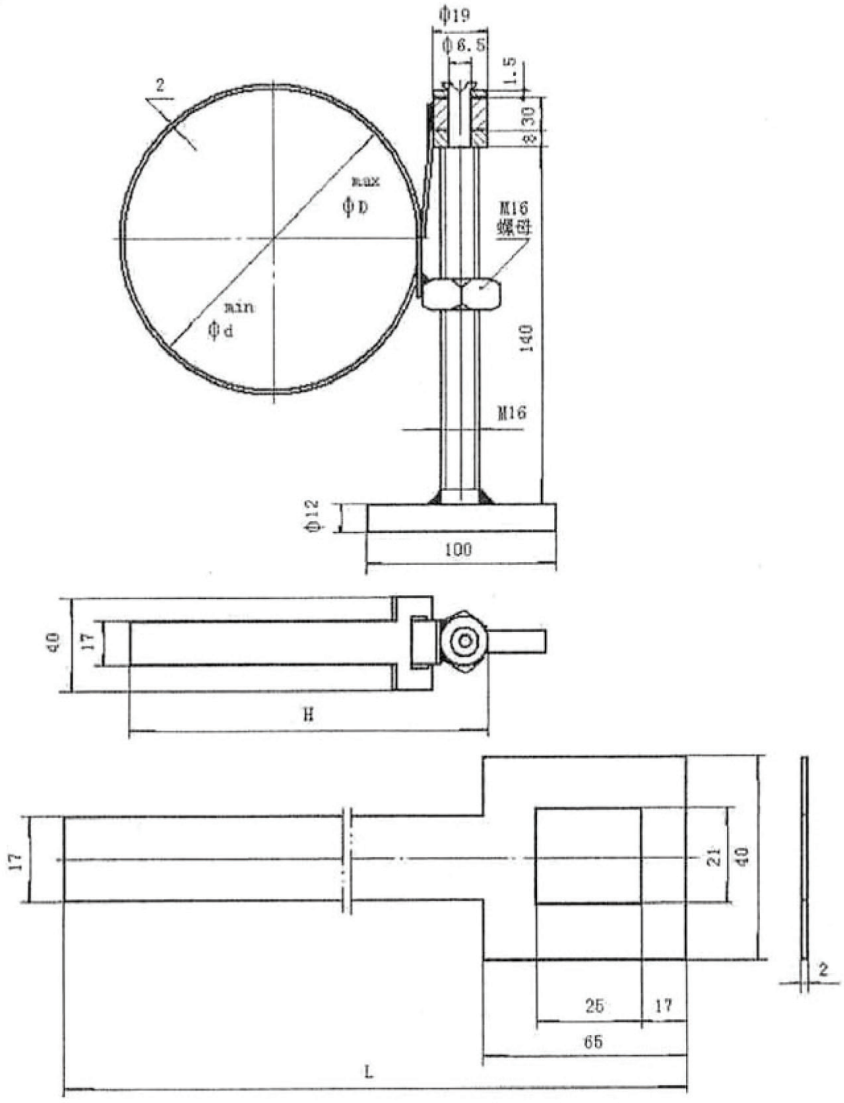

	size	MaxΦD	MinΦd	L	H	kg
TBAR2	2"	80	65	310	110	0.49
TBAR3	3"	100	85	380	130	0.51
TBAR4	4"	120	105	445	150	0.525
TBAR6	6"	180	165	635	225	0.575

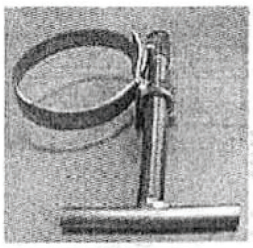

T-BAR Clamps

DRW LY-004-TBAR-01